FlexiCap, **Flexi**Top Fluid Transfer System

tblplastics.com

- Customizable to meet your specific application requirements
- Eliminate pouring of high valued products through this leak proof aseptic system
- Flexible system is designed with closures that fit bottles or carboys with 53B, 83B, and 120 mm closures
- High purity platinum cured silicone insert with or without tubing
- Patented polypropylene **Flexi**Cap closures
- Accept additional fluid transfer components such as aseptic connectors and air vent filters
- All components are autoclavable
- **Made in the USA**

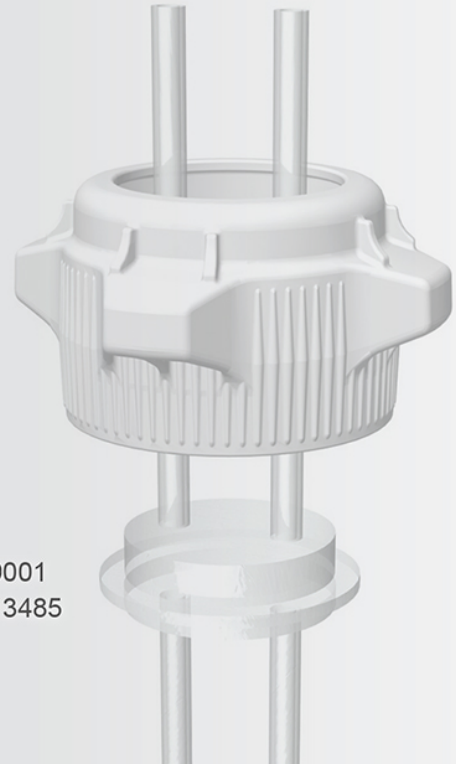

ISO 9001
ISO 13485

TBL Plastics' **Flexi**Cap, **Flexi**Top Systems are aseptic handling solutions for high purity fluids and sensi-tive biologicals in pharmaceutical, biotechnology, and laboratory liquid transfer applications. Customize your new TBL Plastics' **C**-Grip carboys and HD Bottles, or existing plastic carboys and bottles for aseptic fluid transfer, sampling, or sealing.

53B	TBL-205-7001	TBL-205-7002	TBL-205-7003

83B	TBL-205-7101	TBL-205-7102	TBL-205-7103

120mm	TBL-05-7201	TBL-205-7202	TBL-205-7203

1. Platinum Cured silicone
2. Single piece construction
3. FlexiCap technology

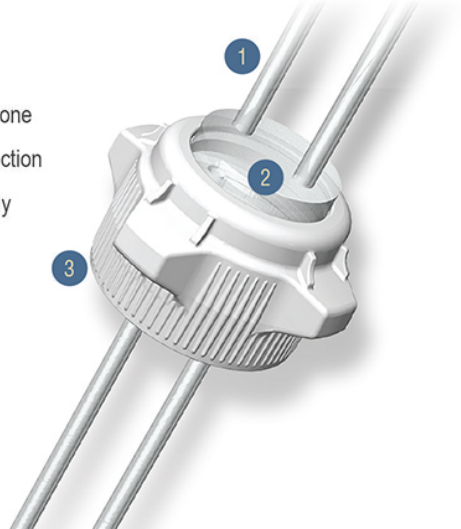

ThermoplasticBioLogic

FlexiCap, **Flexi**Top Fluid Transfer System

tblplastics.com

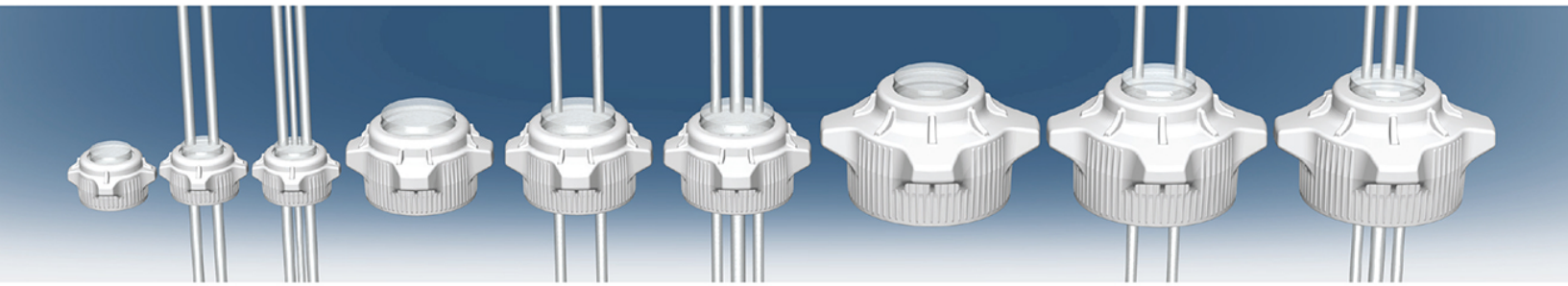

Item Number	Description	**Flexi**Cap Size	Number of Ports	Tubing Diameter	Tubing Length	Pack Size
TBL-205-7001	53B Open **Flexi**Cap with Closed **Flexi**Top	53B	Solid Insert	n/a	n/a	1
TBL-205-7002	53B Open **Flexi**Cap with **Flexi**Top Fluid Transfer System	53B	2	2-1/4" (6.35mm)	12"	1
TBL-205-7003	53B Open **Flexi**Cap with **Flexi**Top Fluid Transfer System	53B	2	1-1/8" (3.18mm), 2-1/4" (6.35mm)	12"	1
TBL205-7101	83B Open **Flexi**Cap with Closed **Flexi**Top	83B	Solid Insert	n/a	n/a	1
TBL-205-7102	83B Open **Flexi**Cap with **Flexi**Top Fluid Transfer System	83B	2	2-1/4" (6.35mm)	27"	1
TBL-205-7103	83B Open **Flexi**Cap with **Flexi**Top Fluid Transfer System	83B	2	1-3/8" (9.52mm) 2-1/4" (6.35mm)	27"	1
TBL-205-7201	120mm Open **Flexi**Cap with Closed **Flexi**Top	120mm	Solid Insert	n/a	n/a	1
TBL-205-7202	120mm Open **Flexi**Cap with **Flexi**Top Fluid Transfer System	120mm	2	2-1/4" (6.35mm)	37"	1
TBL-205-7203	120mm Open **Flexi**Cap with **Flexi**Top Fluid Transfer System	120mm	2	1-3/8" (9.52mm), 2-1/4" (6.35mm)	37"	1

BPA -Free

Rev. 20-001-01
07/28/2014

TBL Plastics, 26 Brookfield Drive, Unit C, Sparta, NJ 07871
www.tblplastics.com Order Now: 973-383-2834